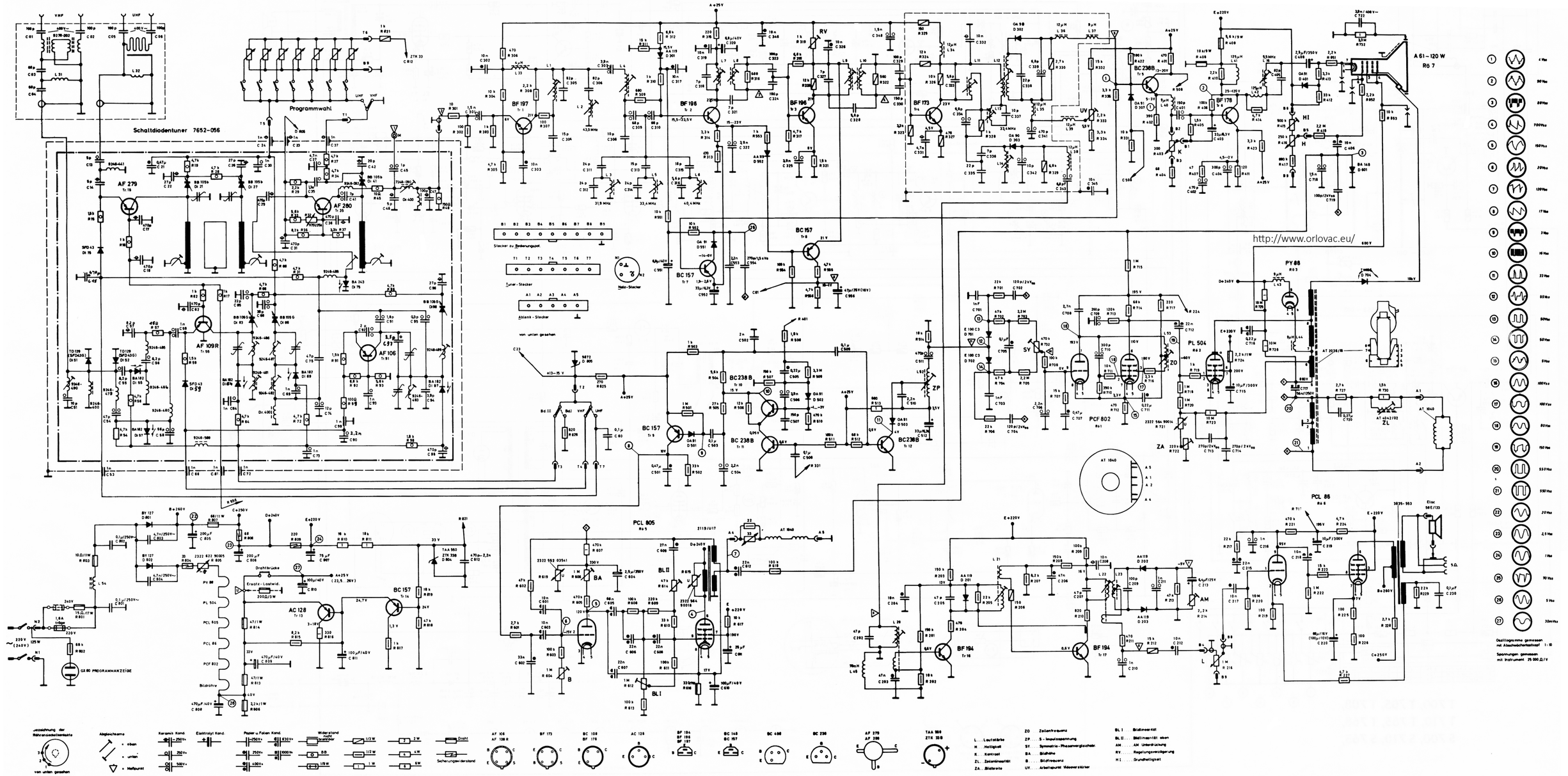

http://www.orlovac.eu/